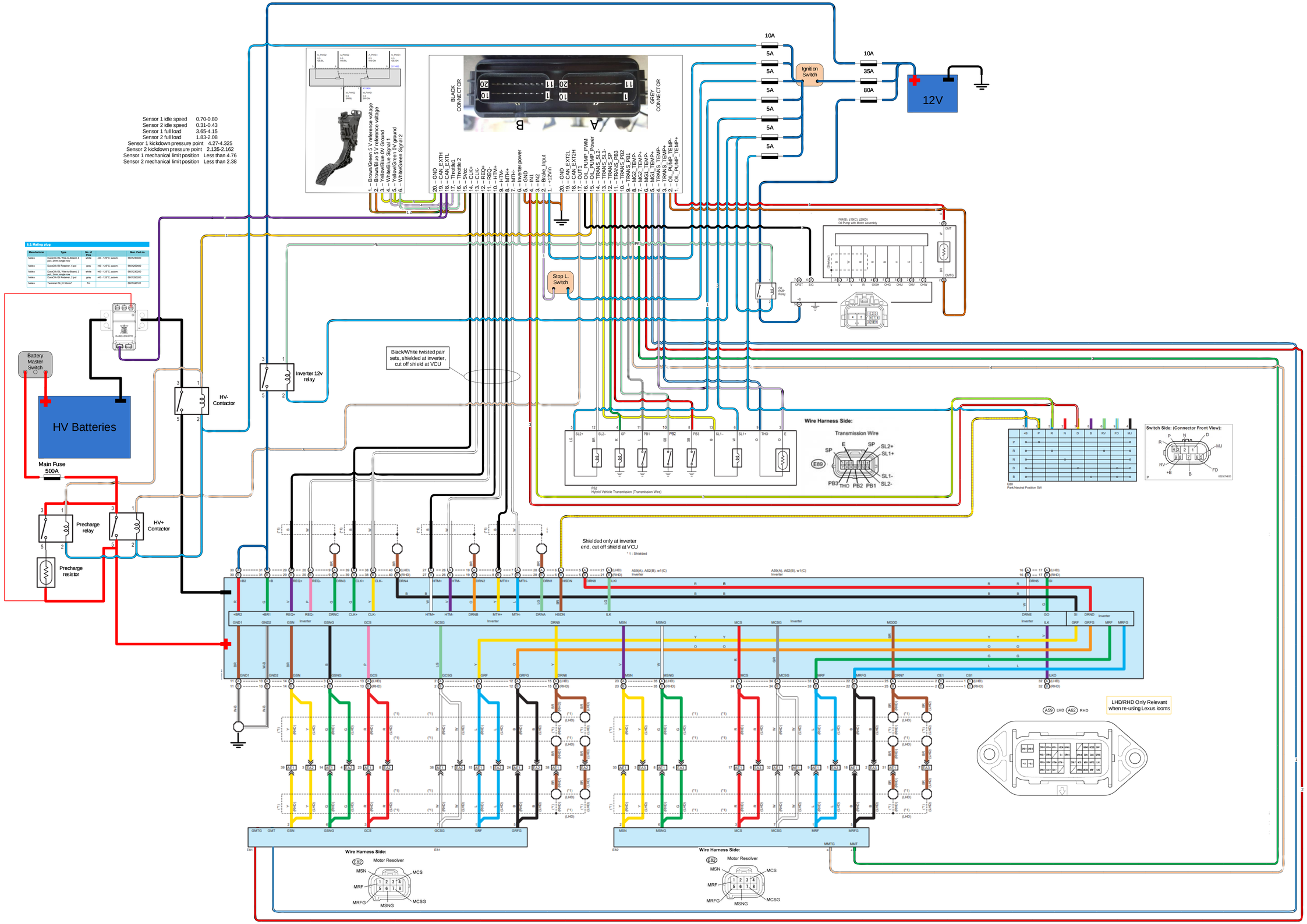

6.5 Mating plug				
Manufacturer	Type	No. of Pins		Man. Part no.
Molex	DuraClik ISL Wire-to-Board 4 pol., 2mm, single row	white	-40 - 120°C, autom.	5601230405
Molex	DuraClik ISI Retainer, 4 pol	grey	-40 - 120°C, autom.	5601250400
Molex	DuraClik ISL Wire-to-Board 2 pol., 2mm, single row	white	-40 - 120°C, autom.	5601230200
Molex	DuraClik ISI Retainer, 2 pol	grey	-40 - 120°C, autom.	5601250200
Molex	Terminal ISL, 0.35mm²	Tin		5601240101